Lateral Block Pier System
Installation Instructions for Florida Only
By Tie Down Engineering

- ***Easy Installation***
- ***Approved for ground or poured concrete sets ups***
- ***LSD struts easily added for longitudinal protection***

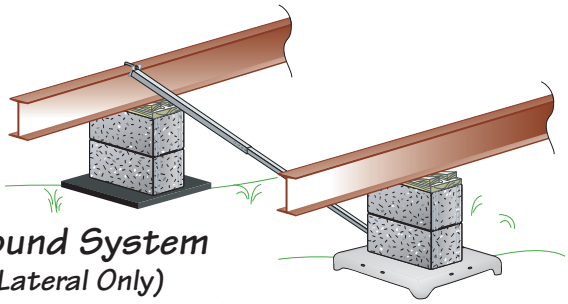

Ground System
(Lateral Only)

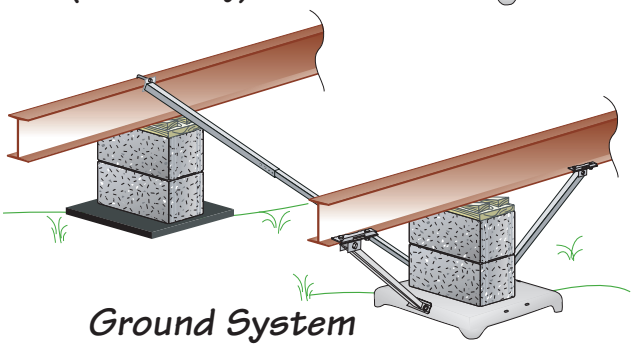

Ground System
(Lateral/Longitudinal Combo)

REQUIREMENTS

- Installation can be made in any type of soil, 4B or better
- Florida requires 5' 4" anchor spacing for vertical ties
- 4' ground anchors are used with the Xi-system in 4A and 4B soils,except at shear wall or marriage wall locations where loads exceed 3150 pounds. Florida requires that 5' anchors be used at these locations.
- Center line or shear wall anchors, that may be required by specific manufacturers, are to be sized according to soil torque conditions. Follow all manufacturers instructions for anchor type and placement in addition to Florida regulations.
- Poured concrete must be 2,500 PSI minimum at 28 days.
- Square concrete pads minimum is 18" wide by 12" deep. Round concrete pads minimum is 18" wide by 14" deep. Strip footings minimum is 18" wide by 14' long by 6" deep or 27" wide by 14' long by 4" deep.
- Maximum height is a 96" projection. Higher walls may be used, when the design loads are adjusted accordingly.
- Longitudinal strut angles need to be no more than 50 degrees and no less than 25 degrees. See page 4.
- Maximum roof eave is 16"
- Main rail spacing must be 99.5" or less
- Maximum pier height at the Xi-system is 48"
- Instructions are not for use on "Exposure D" homes within 1500 feet of the coastline
- Installation instructions are based on 4200# per pad longitudinal load and 6000# per pad lateral load.
- This System only replaces normal lateral frame tie and longitudinal end tie anchorage and plates, for longitudinal only installations diagonal frame ties and stabilizer plates are still needed every 5'4". The home manufacturer may require additional vertical anchor ties that are unique to a home's design. These locations may include shear walls, marriage line ridge beam supports, and rim plates. Check the manufacturer's installation instructions for set-up requirements.

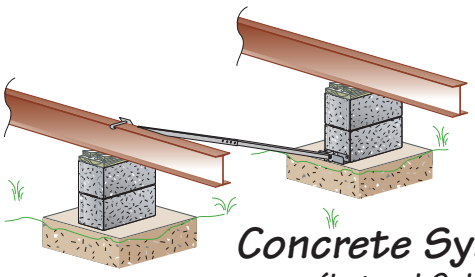

Concrete System
(Lateral Only)

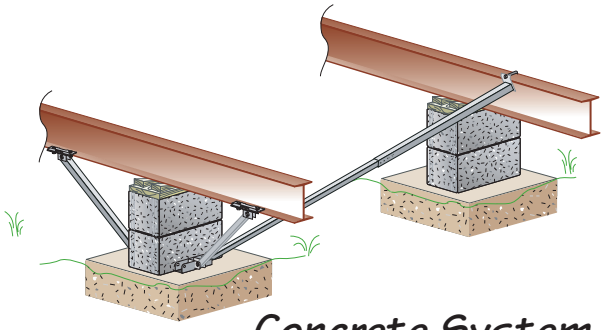

Concrete System
(Lateral/Longitudinal Combo)

D333 Rev. 7/25/22

TIE DOWN
MANUFACTURING INGENUITY

404-344-0000 • tiedown.com
605 Stonehill Drive SW, Atlanta, GA 30336

Installation of Lateral System

1. Identify the number of systems to be used on the home using the chart provided.
2. Identify the location where the lateral systems will be installed.
3. Clear all organic matter and debris from the pad site.
4. Place pad centered under beam with the lateral strut bracket towards the inside of the home.
5. Press or drive pan into ground until level and flush with prepared surface.
6. Build pier according to State, Local or Home Manufacturers guidelines.*(Figure 1)*
7. Attach the end of the smaller tube to the inside of pan using U-bolt & nuts provided
8. Attach the flag end of the larger tube to the opposite I-beam using the "J" bolt over the top of the I-beam with the nut & washer provided. *(Figure 2)*
9. Install a minimum of four (#12 x 1" tek screws) self-tapping screws into the holes provided in the lateral strut so that the two tubes are connected together. *(Figure 1)*

Figure 1

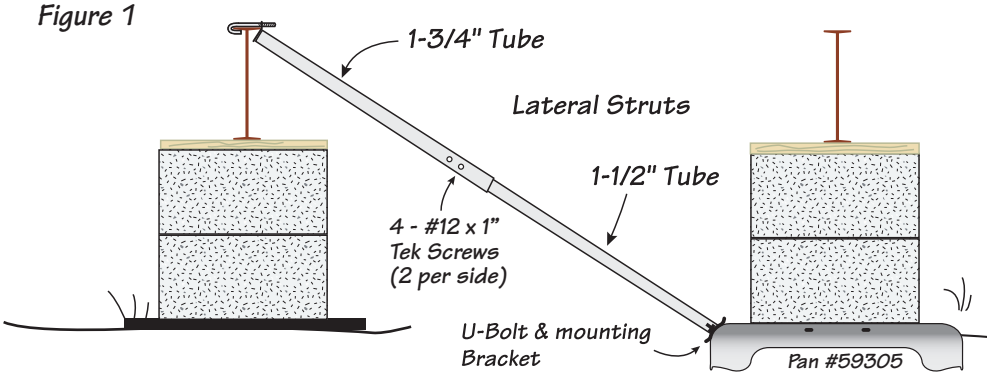

Figure 2

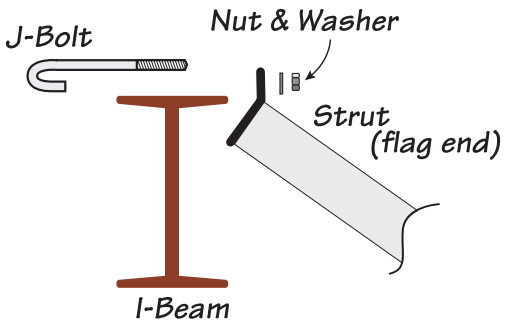

Installation of Longitudinal Struts

1. Identify the number of systems to be used on the home using the chart provided.
2. Clear all organic matter and debris from the pad site.
3. Place u-bolts though holes provided. Attach lock washers on u-bolt, on the top side of pan
4. Press or drive pan into ground until level and flush with prepared surface.
5. Build pier according to State, local or Home Manufacturers guidelines.
6. Install frame bracket clamps to I-beam. Do not tighten nuts at this time.
7. Insert u-bolt through mount bracket, on longitudinal strut attach with nut and bolt. Do not tighten at this time.
8. Insert strut in the frame bracket clamp, attach with nut and bolt. Do not tighten at this time.
9. Pull the frame bracket clamps with the fastened strut outward to remove any slack.
10. Tighten all nuts and bolts on the struts and beam clamps.

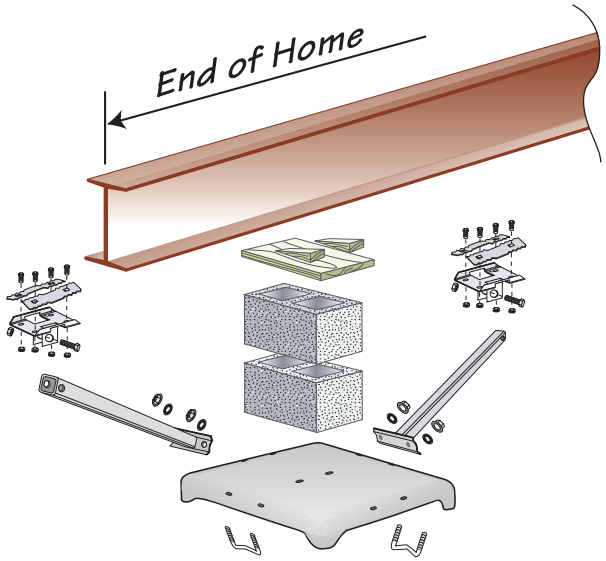

TIE DOWN
MANUFACTURING INGENUITY

404-344-0000 • tiedown.com
605 Stonehill Drive SW, Atlanta, GA 30336

D333; 7/25/22

Longitudinal and Lateral Stabilization for Florida

Xi Lateral "Only" System

LSD Longitudinal "Only" System

LSD Longitudinal with Lateral Strut Combo

Homes Up To 52'

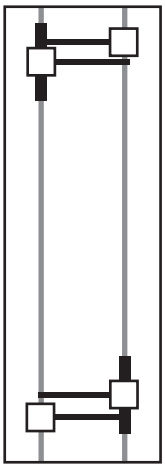

Single
Up to 16' Width
2 Combo Systems
2 Lateral only

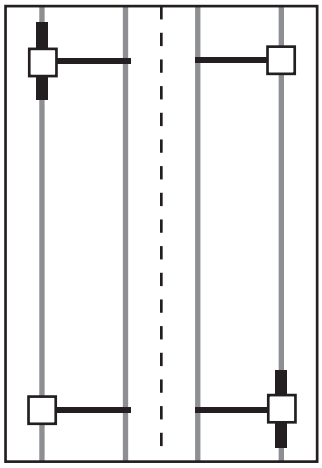

Double Section
Up to 32' Width
2 Combo Systems
2 Lateral Only

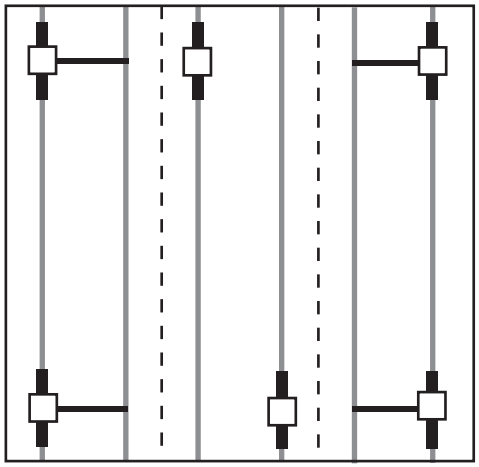

Triple Section or "Tag"
Up to 48' Width
4 Combo Systems
2 Additional Longitudinal Xi Piers

Homes Over 52', up to 80'

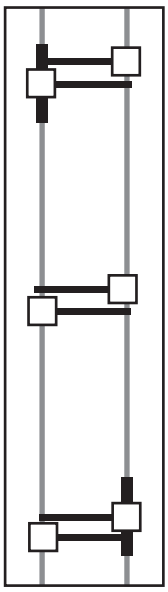

Single
Up to 16' Width
2 Combo Systems
4 Lateral Only

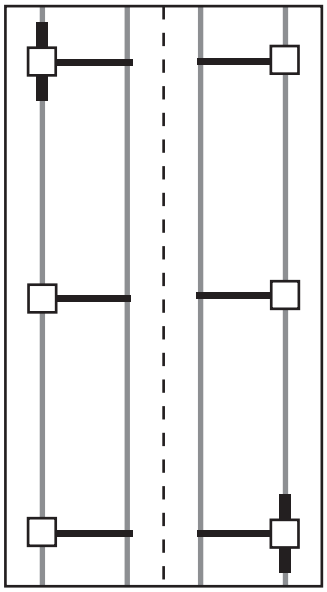

Double Section
Up to 32' Width
2 Combo Systems
4 Lateral Only

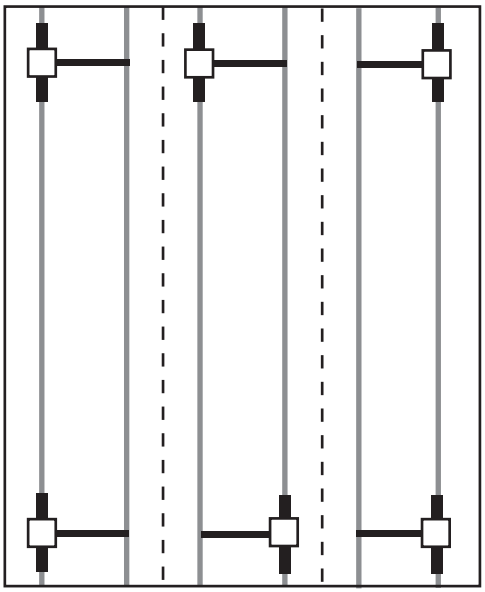

Triple Section or "Tag"
Up to 48' Width
6 Combo Systems

Notes: 5/12 roof pitch home requires 2 additional systems
6 lateral systems up to 52', 8 lateral systems up to 80'
Longitudinal systems consist of 2 struts which can be used in pairs or seperately

D333; 7/25/22

Installation of Concrete Bracket: Dry Set/Wet Set

1. Identify the number of systems to be used on the home using the chart provided.
2. Identify the location where the lateral systems will be installed.
3. Build pier according to State, Local or Home Manufacturers guidelines.

4a. For dry set: drill two 3/8"x 3" deep holes in the concrete using holes in galvanized bracket as a guide. Attach bracket to concrete pad using 3/8"x3-1/2" wedge anchors provided. Place nut & washer on anchor, leave enough room for 1 to 2 threads showing on top of bolt. Using a hammer, tap the wedge bolts into hole through bracket, leaving nut & washer flush with bracket. Using a 9/16" socket wrench, tighten wedge/anchor bolt, securing bracket to the concrete.

4b. For wet set: align bracket and submerge legs completely in concrete. Bottom of bracket should rest on surface.

5. Attach the end of the smaller tube to the bracket mounted on the pad, using the grade 5, 1/2" x 2-1/2" bolt/nut provided.
6. Attach the flag end of the larger tube to the opposite I-beam using the "J" bolt over the top of the I-beam with the nut & washer provided. *(Figure 1 on page 2)*
7. Install a minimum of four (#12 x 1" Tek screws) self-tapping screws into the holes provided in the lateral strut so that the two tubes are connected together *(Figure 2 on page 2).*

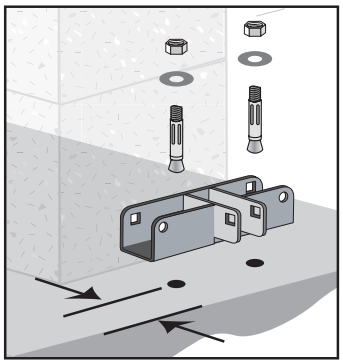

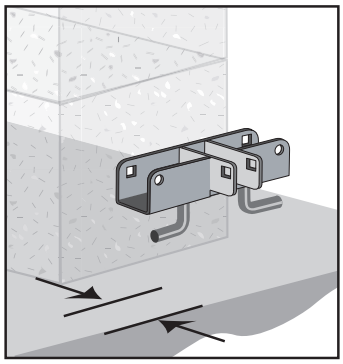

Minimum distance from edge: 1-1/2"

Concrete Lateral/Longitudinal Installations

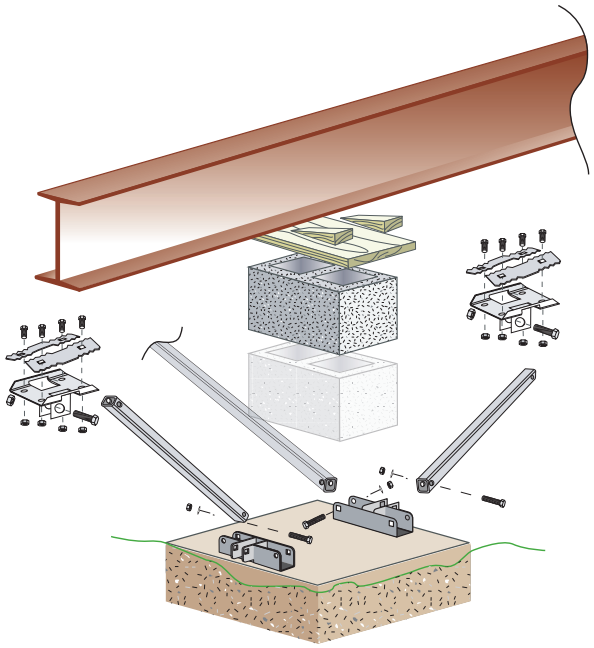

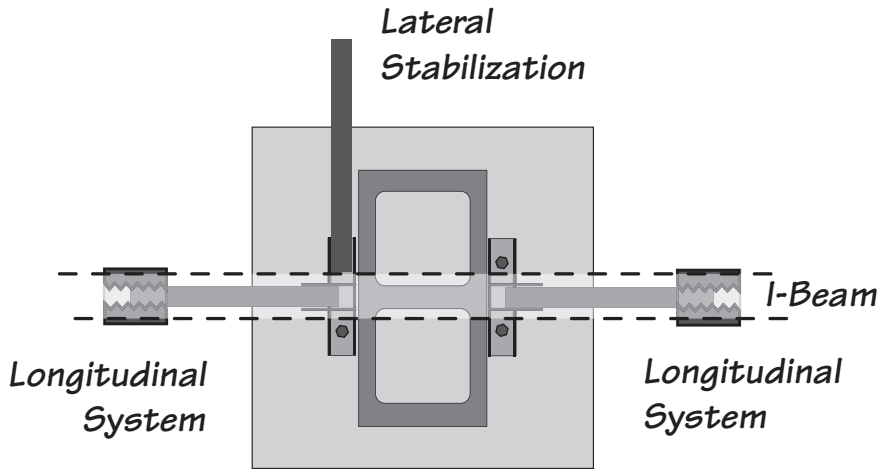

Lateral stabilization and longitudinal systems on both sides.

TIE DOWN
MANUFACTURING INGENUITY

404-344-0000 • tiedown.com
605 Stonehill Drive SW, Atlanta, GA 30336

D333; 7/25/22