Vector Dynamics Foundation System

INSTALLATION INSTRUCTIONS
For HUD Code Wind Zone 1, or IBC 2009, 90 mph, Exposure C
Version 12/9/2009

INDEX

COMPONENT PARTS AVAILABLE UPON REQUEST

Approval

TIE DOWN ENGINEERING • 255 Villanova Drive SW • Atlanta, GA 30336
www.tiedown.com (404) 344-0000 Fax (404) 349-0401

D1095

VECTOR DYNAMICS INSTALLATION DESIGN INSTRUCTIONS

Introduction

These instructions describe the proper use of the lateral and longitudinal foundation system. You may also refer to the home manufacturer's installation manuals that include the Vector Dynamics system as an alternate foundation system.

General

The Vector Dynamics Foundation System provides the support to resist lateral, longitudinal and over-turning movement of the home as required by the Federal Manufactured Home Construction and Safety Standards for Wind Zone I or the Internaional Building Code (IBC) 2009 for 90 mph wind in exposure C when the system is used as described in these instructions. Please verify state or local wind load requirements prior to installation of the home.

The Vector Dynamics Foundation System resists lateral & longitudinal wind loads by anchoring the two longitudinal main rails. The system is approved to be used on single or multi section homes:

- Nominally 12 feet to 18' feet wide- (single section) with main rail spacing of 95 inches or greater on center; multi section main rail spacing of 75 inches or greater on center.
- Nominal 8 foot or less top plate height at sidewalls with main rail depth of 12" or less.
- Additional systems needed on roof slope over 20 degrees (4.37 in 12" slope) see page 8.
- Maximum eave width (roof overhang of sidewall) of 12" for Zone I.
- Maximum pier height under main rails-see page 6.

The Vector Dynamics Foundation Systems may be used as a part of the vertical or gravity support system considering that each Vector Dynamics pad has two (2) or (3) square feet bearing area.

To inquire about the use of the Vector Dynamics Foundation Systems with homes of four or more sections, other widths, on homes requiring pier heights which are not included in these instructions, or in other Wind Zones, contact Tie Down Engineering, Inc. at 1-800-241-1806.

The Vector Dynamics Foundation System has not been designed for use on exposure "D" homes within 1500 feet of the coastline.

Additional vertical anchor ties that are unique to a home's design may be required by the home manufacturer. These locations may include shear walls, marriage line ridge beam support posts, end frame ties and rim plates.

GENERAL INSTALLATION INSTRUCTIONS

SITE PREPARATION

It is necessary that the home site be properly graded and sloped to prevent water and moisture from standing or flowing beneath the home.

FOOTINGS AND FROST LINES

The Vector Dynamics Foundation System was designed to be placed directly on top of the ground (or poured concrete) after clearing all loose vegetation. In areas with frost heave, use Vector for Poured Concrete (see pages 16 & 17) to comply with local requirements for footer depth.

FOUNDATION/FOOTING SPECIFICATIONS FOR VECTOR PADS

Vector Pads are used in place of conventional foundation pads. One Vector pad provides two or three square feet of bearing support. Vector Systems should be spaced as symmetrically as possible along the length of the home. For pier locations in between the Vector Systems, use the normal foundation pads.

LUMBER/MOISTURE - TERMITE SHIELD

To cut PVC or lumber (2 - 2x4's,1 - 4x4 or 1 adjustable steel compression member per Vector system) for the center compression section,when using concrete blocks for piers, measure center to center frame (I-beam) distance and subtract 16". When using METAL PIER STANDS, measure center to center frame distance and add 16". ALL WOOD MUST BE PRESSURE TREATED, GROUND CONTACT RATED .

Pressure treated lumber (ACQ) must be isolated from steel parts by means of an effective and weather resistant material or the steel parts must be galvanized to meet ASTM A153 and steel fastners in contact must be galvanized to meet ASTM 653 or be stainless steel.

Tip: Pre-cut your lumber and mark as to brand or model of homes you will be installing. If frame widths are the same, the pre-cut boards will also be the same length in each Vector set-up.

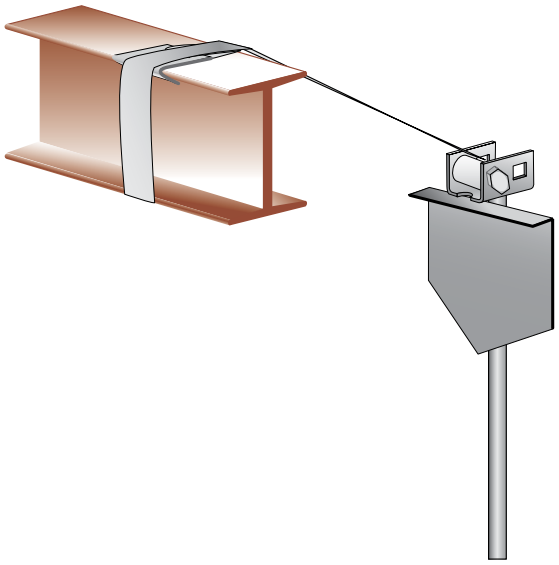

STRAP INSTALLATION

All frame ties and diagonal straps must go from the anchor to the top of the I-Beam. See illustration below.

1. Attach frame hook to top inboard location of "I" beam. (Frame hook must be attached to frame at points closest to floor support.)
2. Keeping in line with the hook, wrap galvanized strap completely around "I" beam.
3. Pull strap past anchor head approximately ten inches before cutting to allow enough strap to give a minimum of five turns around the slotted anchor bolt.
4. Thread loose end through slotted bolt so that the strap is flush with the other side of the bolt.
5. Tighten slotted tensioning bolt a minimum of five full turns.

Vector Dynamics
Foundation Systems
Component Parts List

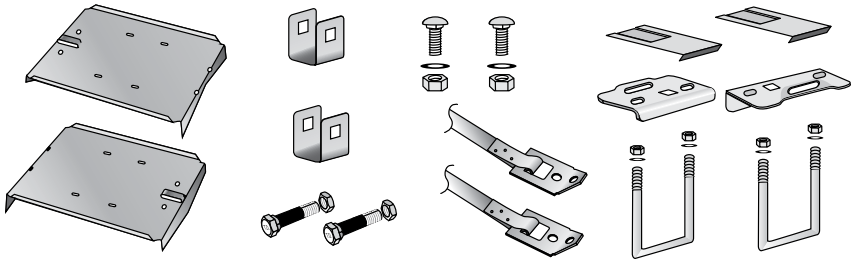

Vector System 2000
Part # 59018
Single piece pads with straps
and slotted bolts

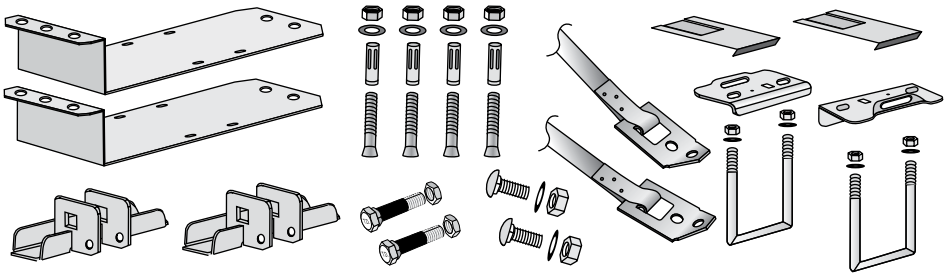

Concrete Vector System
Part # 59036
Single piece pads with
swivel straps and slotted bolts

Part # 59008
Single piece pads *without*
swivel straps and slotted bolts

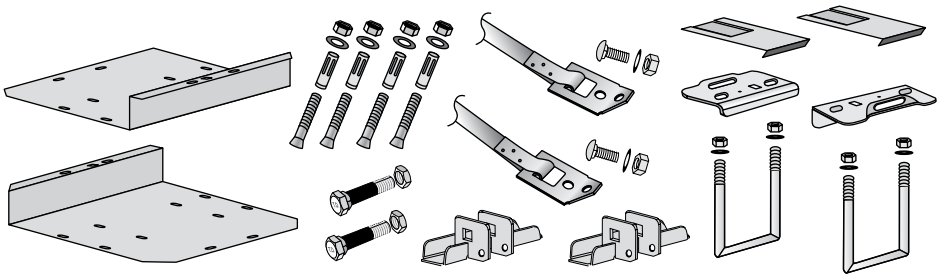

Concrete Vector System
Part # 59049
Double block pads with
swivel straps and slotted bolts

Part # 59006
Double block pads *without*
swivel straps and slotted bolts

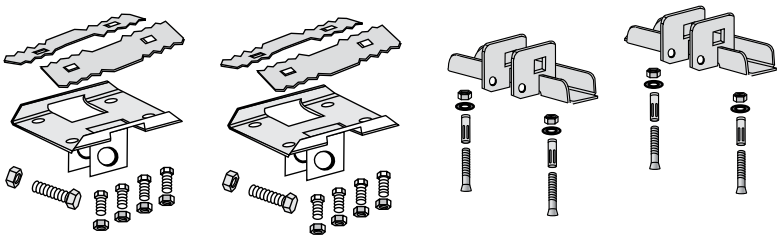

Longitudinal Stabilization
Hardware Kit for Concrete
Part # 59023
(for use with 59006 & 59008)

Vector Dynamics
Foundation Systems
Component Parts List

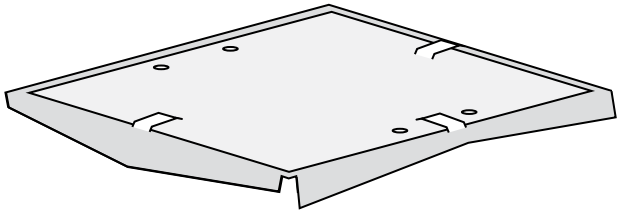

Vector 2000 3 Sq. Ft. Pad
Part # 59271
1 required with 59026 Longitudinal System
2 required with 59024 Lateral System

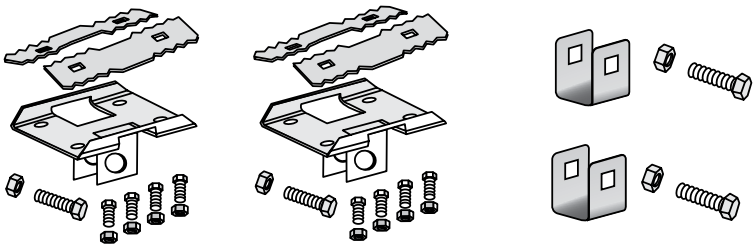

Longitudinal Hardware Kit
Part # 59026 (for use with 59271)

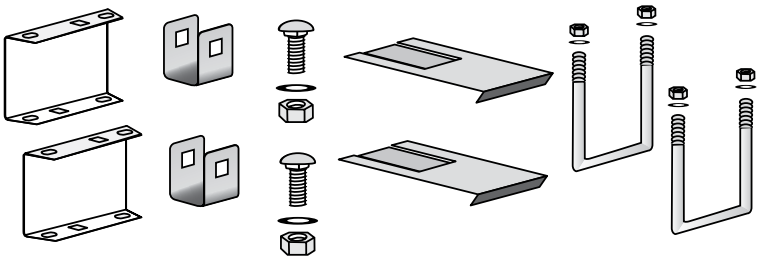

Vector Lateral Hardware Kit
Part # 59024
(for use with 59271)

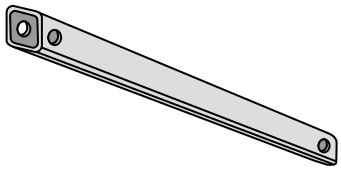

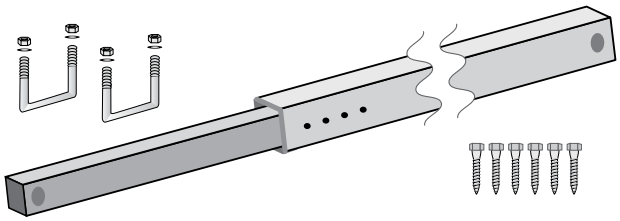

Center Compression Strut
#48612 - Single Section 62” - 108”
#48613 - Double Section, 34” - 60”

Struts for Longitudinal Systems

Part No.	Strut Length	Pier Height
59016	30”	up to 2 Blocks
59012	39”	up to 3 Blocks
59013	44”	up to 4 Blocks
59014	53”	up to 5 Blocks
59015	65”	up to 6 Blocks

Or
these products available
at your local hardware store

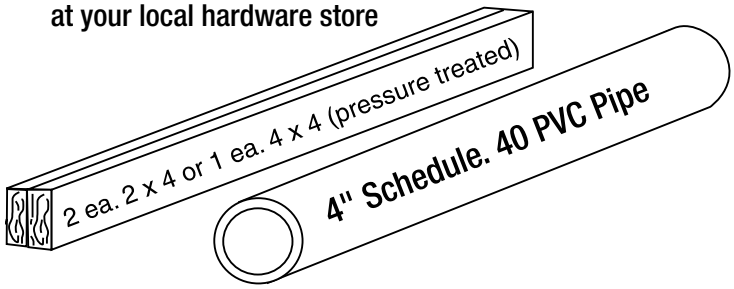

Longitudinal Stabilizer Devices

As an alternate to installing longitudinal anchors and stabilizer plates, the installer may use longitudinal stabilizing devices, including Tie Down's LSD (Longitudinal Stabilization Device). The use of LSD systems on a single or multi section home replaces longitudinal anchors, stabilizer plates and straps.

LSD

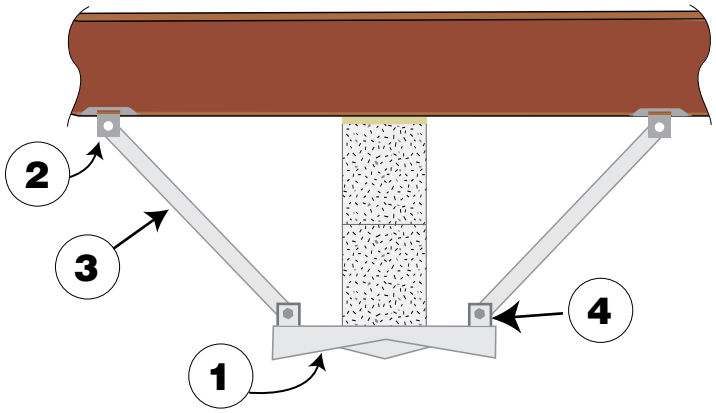

1. Longitudinal Foundation Pad
2. Beam Clamp (2 per system)
3. Longitudinal Strut (2 per system)
4. Tie Bracket (2 per system)

Combine Vector Dynamics & LSD

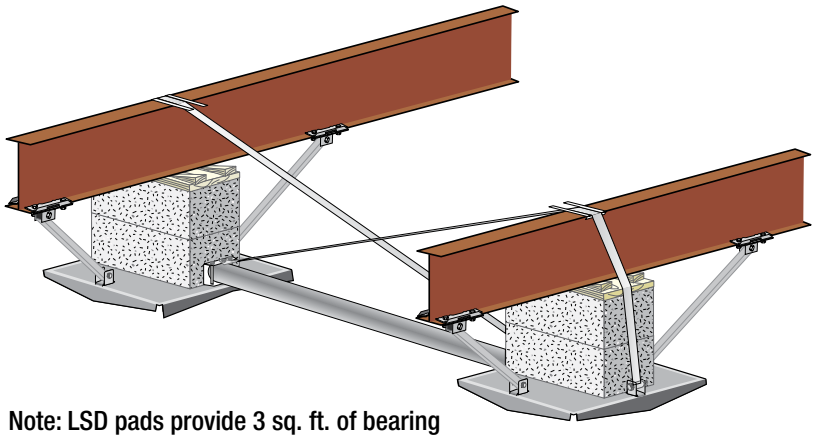

Note: LSD pads provide 3 sq. ft. of bearing support per system and can be used to combine Vector & LSD.

Examples of Possible Placement:

(Contact TIE DOWN for placment in other Wind Zones)

Wind Zone
I
Single Section

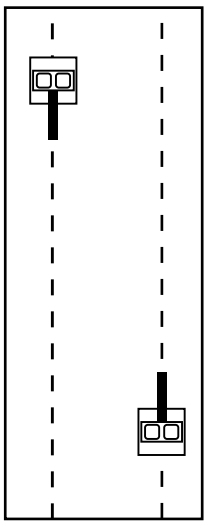

18 Ft. Max.

Wind Zone
I
Double Section

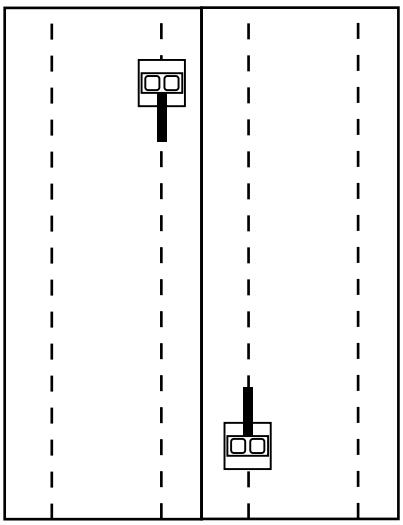

36 Ft. Max.

Wind Zone
I
Triple Section

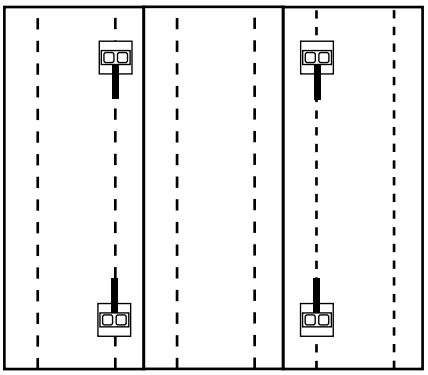

Wind Zone
I
Tag Section

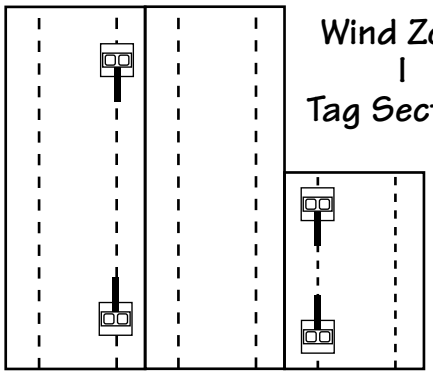

48 Ft. Max.

Figure 1

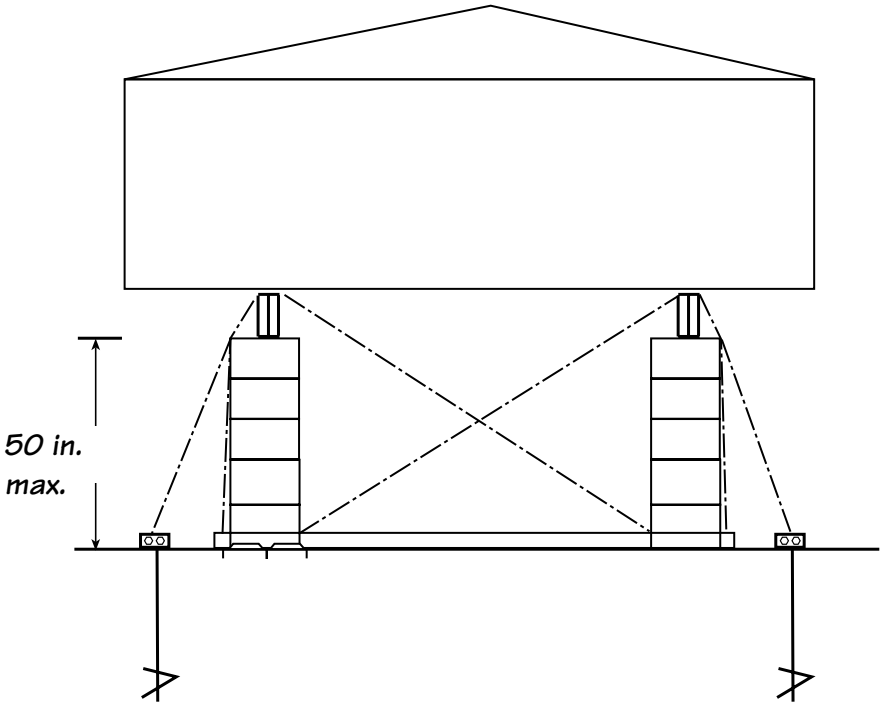

Maximum Pier Height

Vector Dynamics Foundation Systems may be used on single section homes in Wind Zone I which require pier heights (from surface of Vector pads to top of concrete or metal pier) not to exceed 50 inches under one or both main rail(s). Note that a ground anchor must be used at each Vector system location where the pier height exceeds 24 inches for single section homes. On multi-section homes in Wind Zone I, an anchor must be used at each Vector System location with pier heights above 46” with the following exception: double section homes that are 24’ wide, in Wind Zone I, have a maximum pier height without anchors of 38”. See page 13 for double section home high pier set instructions.

Figure 2

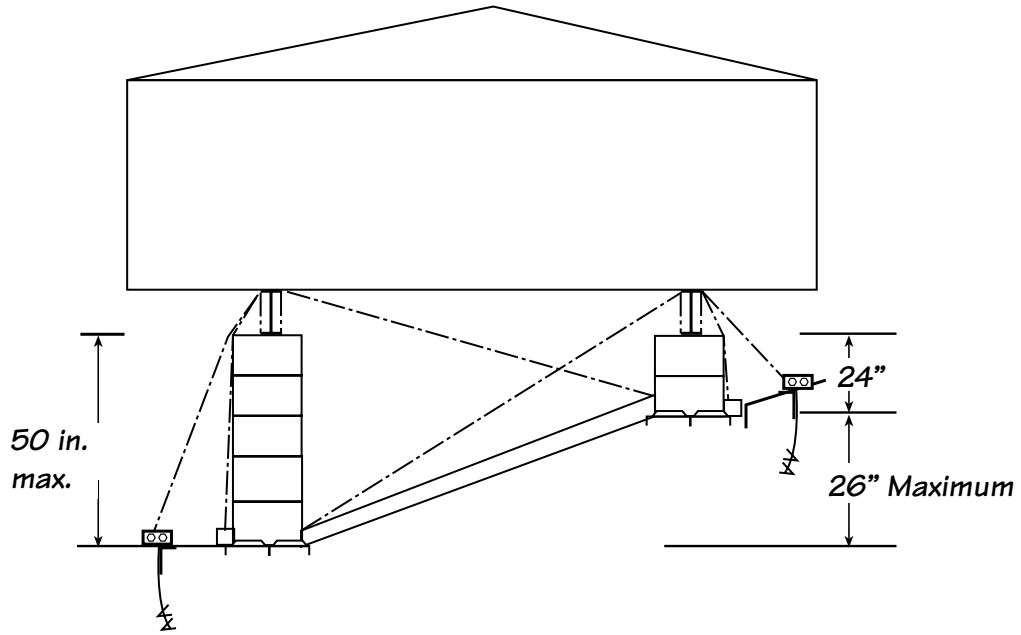

Unequal Pier Heights

Homes with unequal pier heights are limited to 50” maximum pier height. The difference between the taller pier and the shorter pier cannot exceed 26”.

Vector Dynamics System Pitch Slopes for Wind Zone I

Federal Manufactured Home Construction & Safety Standards

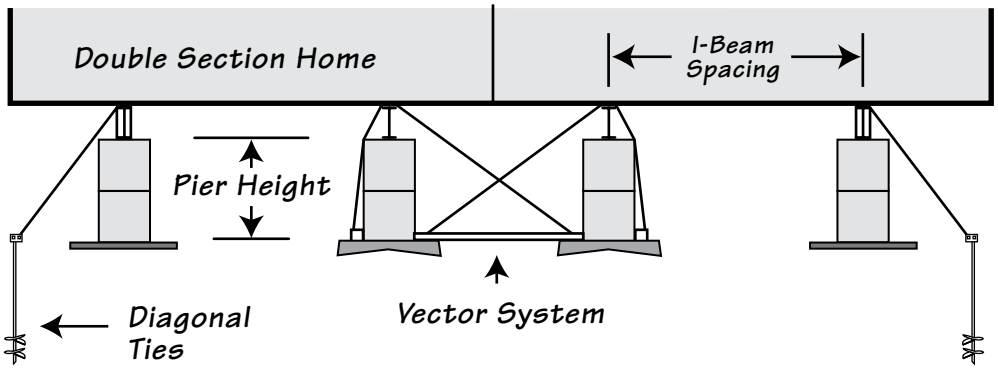

99 1/2" I-Beam Spacing (Maximum)
Diagonal Tie Anchor Spacing = **12'-0" O/C**
Maximum Roof Slope = **5/12**

Unit Width	Max. Pier Height	Max. Sidewall Height	Max. Unit Length for Number of Vector Systems					Vector LSD Systems Each Section
			2	3	4	5	6	
136	32"	96"	28'	41'	55'	69'	80'	1
142	36"	96"	28'	42'	56'	70'	80'	1
156	44"	96"	28'	43'	58'	72'	80'	1
164	56"	96"	27'	40'	54'	68'	80'	1
176	56"	96"	28'	42'	56'	70'	80'	1
180	56"	96"	28'	42'	56'	70'	80'	1
186	56"	96"	28'	42'	56'	70'	80'	2

99 1/2" I-Beam Spacing (Maximum)
Diagonal Tie Anchor Spacing = **12'-0" O/C**
Maximum Roof Slope = **6/12**

Unit Width	Max. Pier Height	Max. Sidewall Height	Max. Unit Length for Number of Vector Systems					Vector LSD Systems Each Section
			2	3	4	5	6	
136	32"	96"	25'	38'	50'	62'	76'	1
142	36"	96"	25'	38'	50'	63'	76'	1
156	44"	96"	25'	38'	50'	64'	76'	1
164	44"	96"	26'	40'	53'	66'	80'	1
176	52"	96"	26'	38'	52'	64'	76'	2
180	52"	96"	26'	38'	52'	64'	76'	2
186	56"	96"	25'	38'	51'	64'	76'	2

GEORGIA REGISTERED No. 18546 PROFESSIONAL ENGINEER JOHN C. DOEDEN
8/31/7

99 1/2" I-Beam Spacing (Maximum)
Diagonal Tie Anchor Spacing = **12'-0" O/C**
Maximum Roof Slope = **7/12**

Unit Width	Max. Pier Height	Max. Sidewall Height	Max. Unit Length for Number of Vector Systems					Vector LSD Systems Each Section
			2	3	4	5	6	
136	28"	96"	24'	36'	48'	60'	72'	1
142	28"	96"	25'	38'	50'	63'	76'	1
156	36"	96"	25'	38'	50'	62'	75'	1
164	36"	96"	26'	38'	52'	64'	76'	1
176	40"	96"	26'	38'	51'	64'	76'	2
180	40"	96"	26'	38'	51'	64'	76'	2
186	40"	96"	26'	38'	51'	64'	76'	2

080707,D973

Set-Up Instructions for Vector System #59018

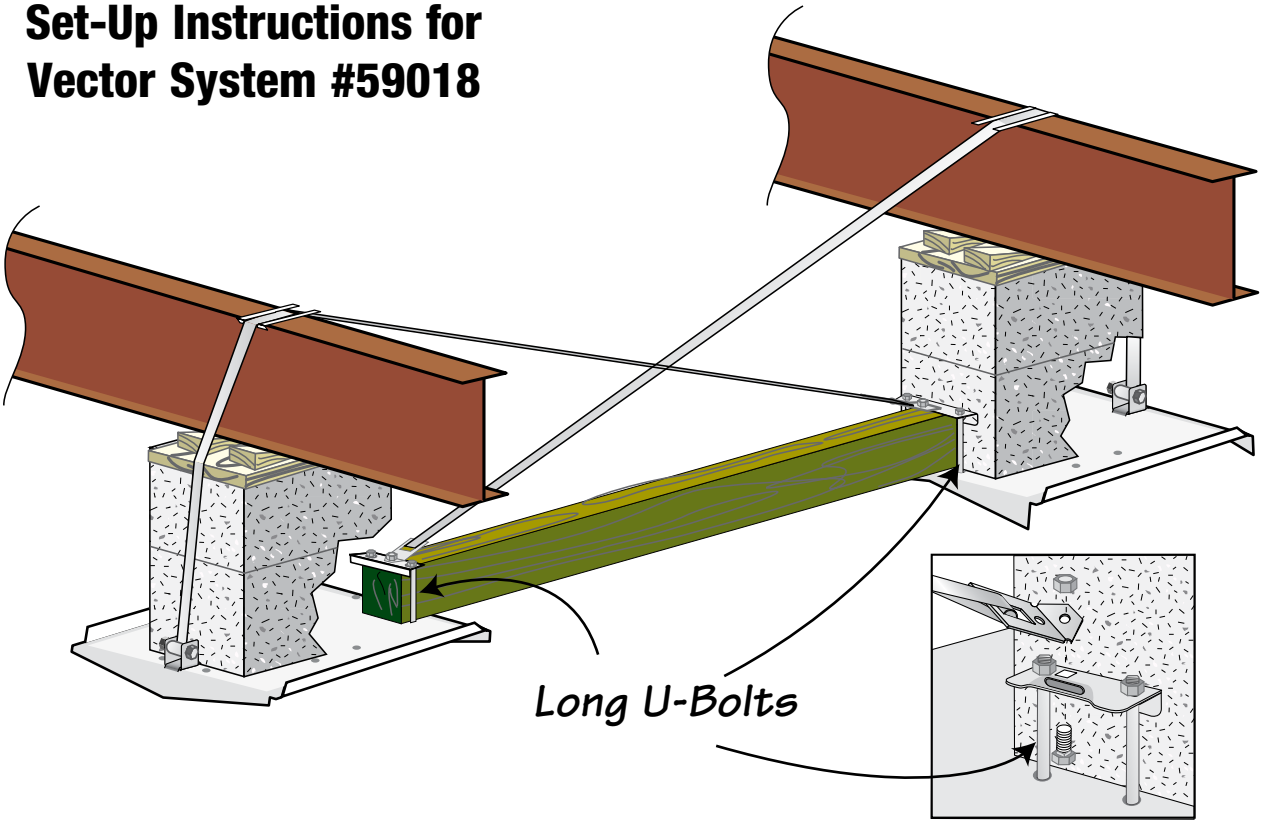

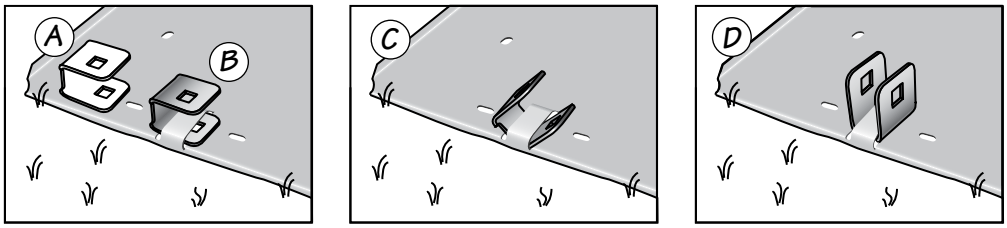

1. Set Vector Pads
Clear all vegetation where pads will rest. Place a long U-bolt in pad as shown. Press or hammer pad into the ground.

2. Set Block or piers on pads.
Center foundation blocks or piers on pads. Place pre-cut center compression member between blocks, resting on pads, centers between U-bolts as shown.

3. Outside Tension Bracket
Attach outside tension bracket as shown to outside of pads.

4. Inside brackets & straps
Attach the inside tie brackets to the U-bolts over the compression member. Attach a strap w/hook or swivel strap w/nut & bolt. Place other end of the strap over opposite I-beam & down to outside tension bracket. Cut strap 12 - 15 inches past bracket. Attach strap & slotted bolt in bracket. Tighten strap until tight with 4-5 wraps around bolt. Repeat with opposite strap.

WIND ZONE I for Single Section Homes

Using Vector Dynamics Foundation Systems

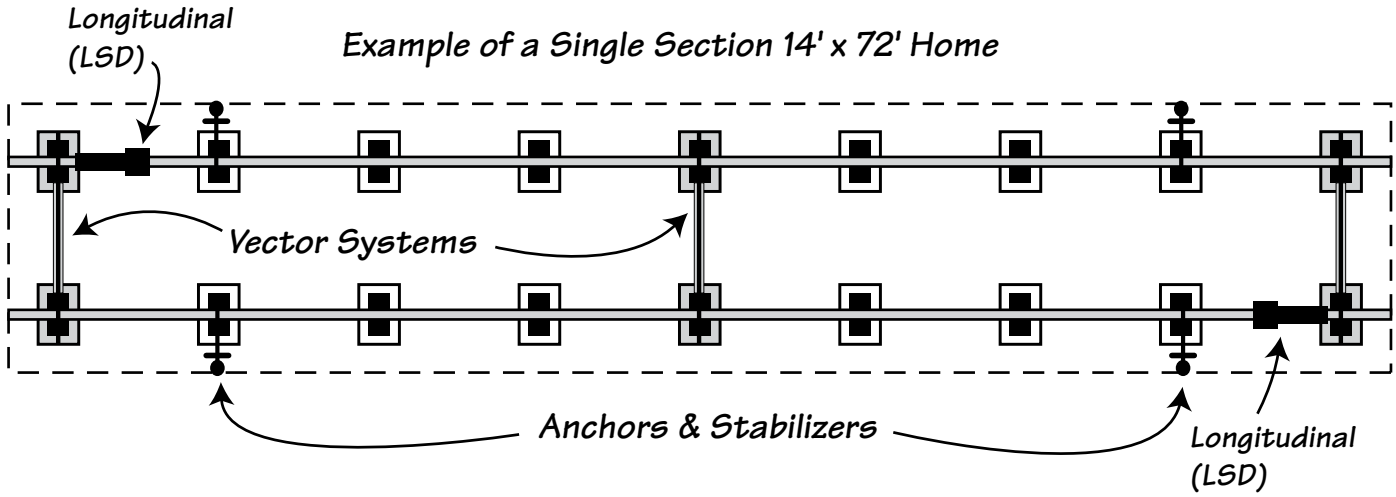

Soil Classifications: 2, 3, 4A & 4B
Soil Bearing Capacity: 1,000 PSF Minimum
Anchors Required: 30" with 2-4" helix anchors (#59095) & 12" Stabilizer Plates (#59292) with 1-1/4" Frame Ties

Home Length	Vector Systems Required	Anchors Required Per Side Up To 24" Pier	24+" Piers	Longitudinal Systems* (LSD)
0 to 72'	3	2	3	1 (2 Struts)
73' to 90'	4	3	4	1 (2 Struts)

NOTES:
Vector Systems should be spaced as symmetrical as possible along the length of the home. Pier spacing must be consistent with home manufacturers instruction and/or state requirements.

*** One Longitudinal Vector System is made up of 2 struts, which can be used separately**.

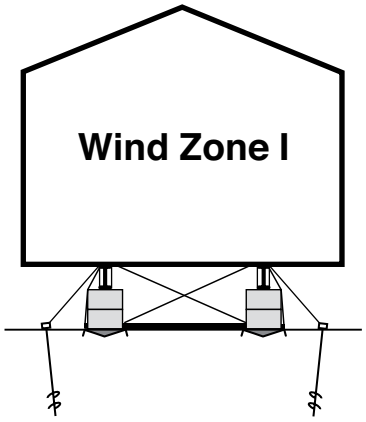

WIND ZONE I for Double Section Homes

Using Vector Dynamics Foundation Systems

Example of a Double Section 28' x 72' Home

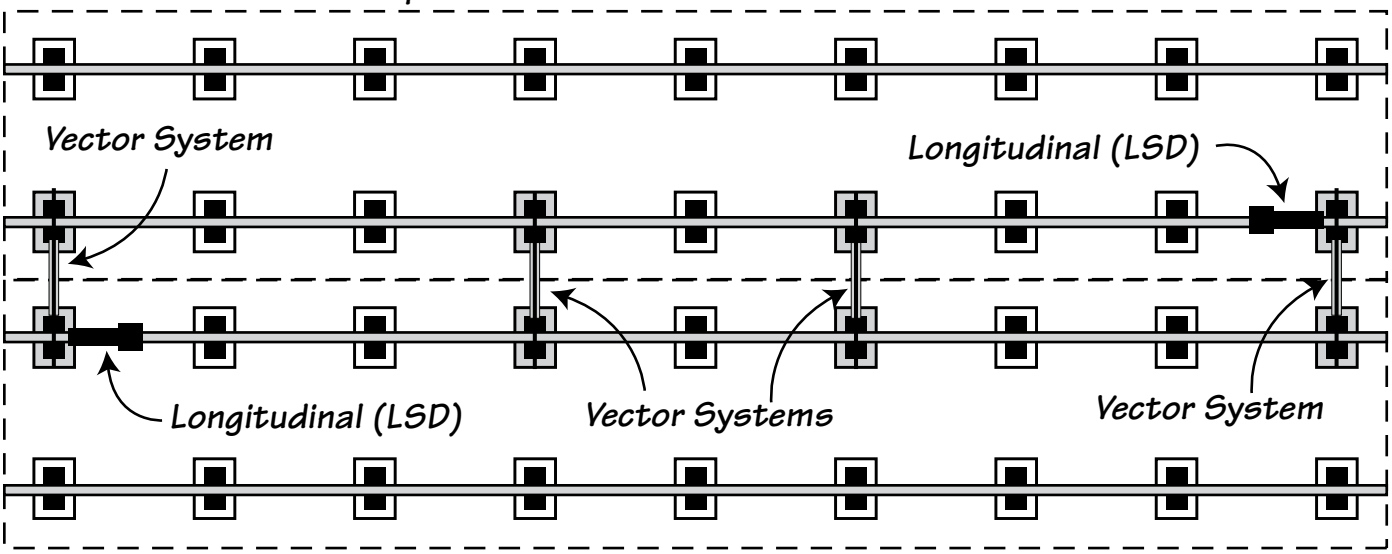

Soil Classifications: 2, 3, 4A & 4B
Soil Bearing Capacity: 1,000 PSF Minimum
Anchors Required*: None (*Marriage wall and sheer wall anchors may be required by home manufacturer.)

Home Length	Vector Systems Required	Anchors Required Per Side	Longitudinal System[1] (LSD)
0 to 48'	2	0*	1 (2 Struts)
49' to 71'	3	0*	1 (2 Struts)
72' to 84'	4	0*	1 (2 Struts)
85' to 90'	5	0*	1 (2 Struts)

NOTES:
*No anchors required for pier heights up to 46" for 28'-36' wide, 38" for 24' wide.

Vector Systems should be spaced as symmetrical as possible along the length of the home. Pier spacing must be consistent with home manufacturers instruction and/or state requirements.

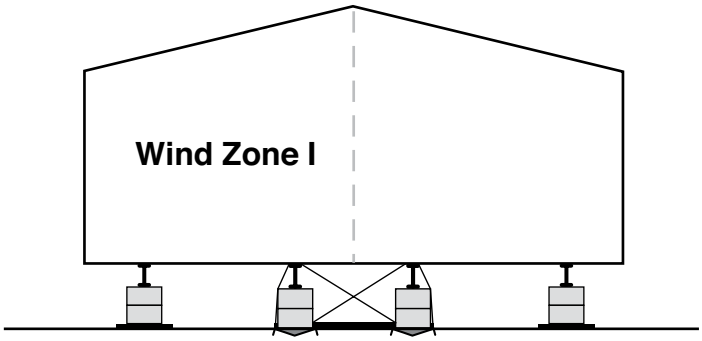

[1] **One Longitudinal Vector System is made up of 2 struts, which can be used separately.**

WIND ZONE I for Triple Section Homes

Using Vector Dynamics Foundation Systems

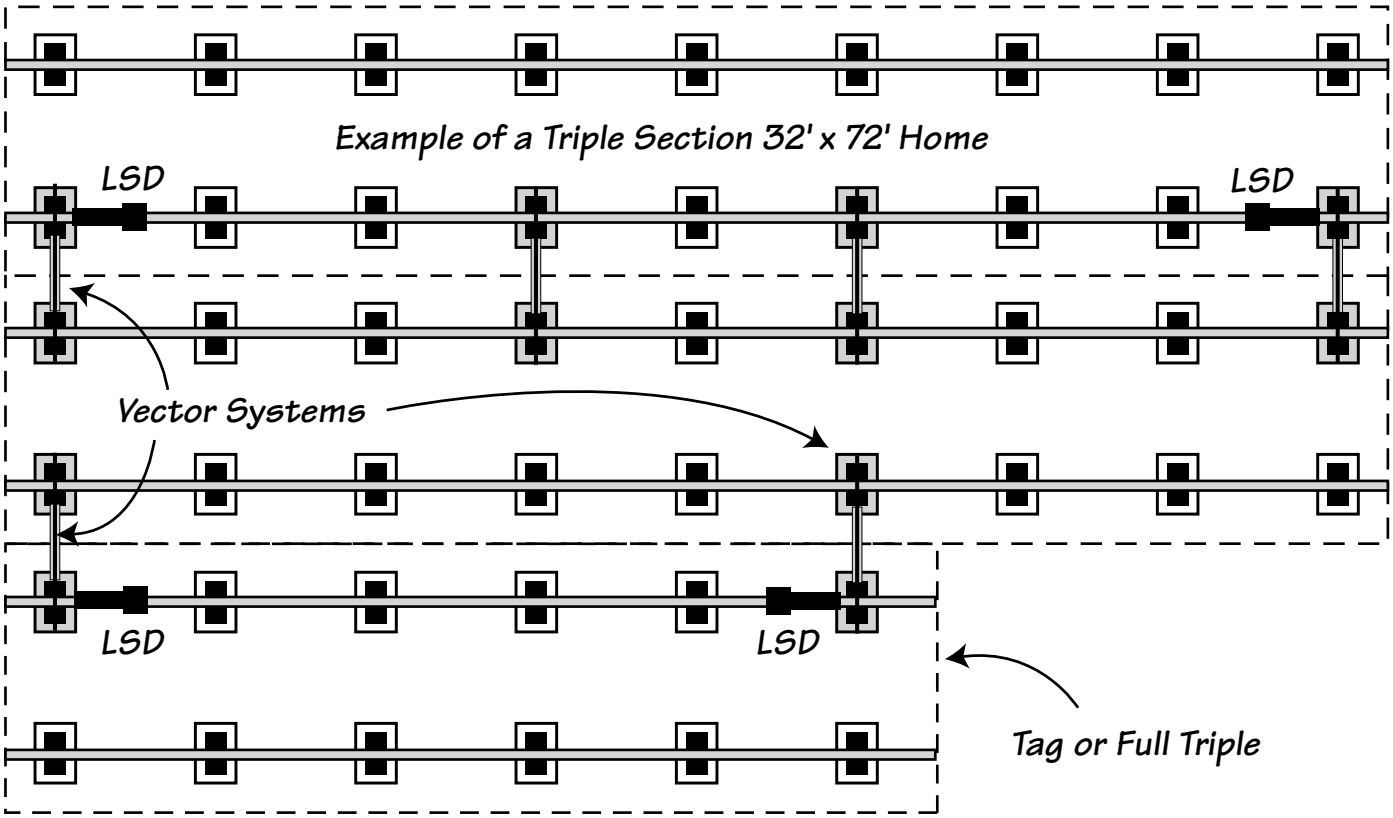

Soil Classifications: 2, 3, 4A & 4B
Soil Bearing Capacity: 1,000 PSF Minimum
Anchors Required*: None (*Marriage wall and sheer wall anchors may be required by home manufacturer.)

Home Length	Vector Systems Required	Anchors Required Per Side	Longitudinal System[1] (LSD)
0 to 48'	2 + 2 on Tag	0*	2 (4 Struts)
49' to 71'	3 + 2 on Tag	0*	2 (4 Struts)
72' to 84'	4 + 2 on Tag	0*	2 (4 Struts)
85' to 90'	5 + 2 on Tag	0*	2 (4 Struts)

NOTES:

*** When a pier height at Vector locations exceeds 46", an anchor must be used on the outside wall/beam at that approximate location.**

Vector Systems should be spaced as symmetrical as possible along the length of the home. Pier spacing must be consistent with home manufacturers instruction and/or state requirements.

[1] One Longitudinal Vector System is made up of 2 struts, which can be used separately.

WIND ZONE I for Double Section Homes (High Pier Sets)

Using Vector Dynamics Foundation Systems

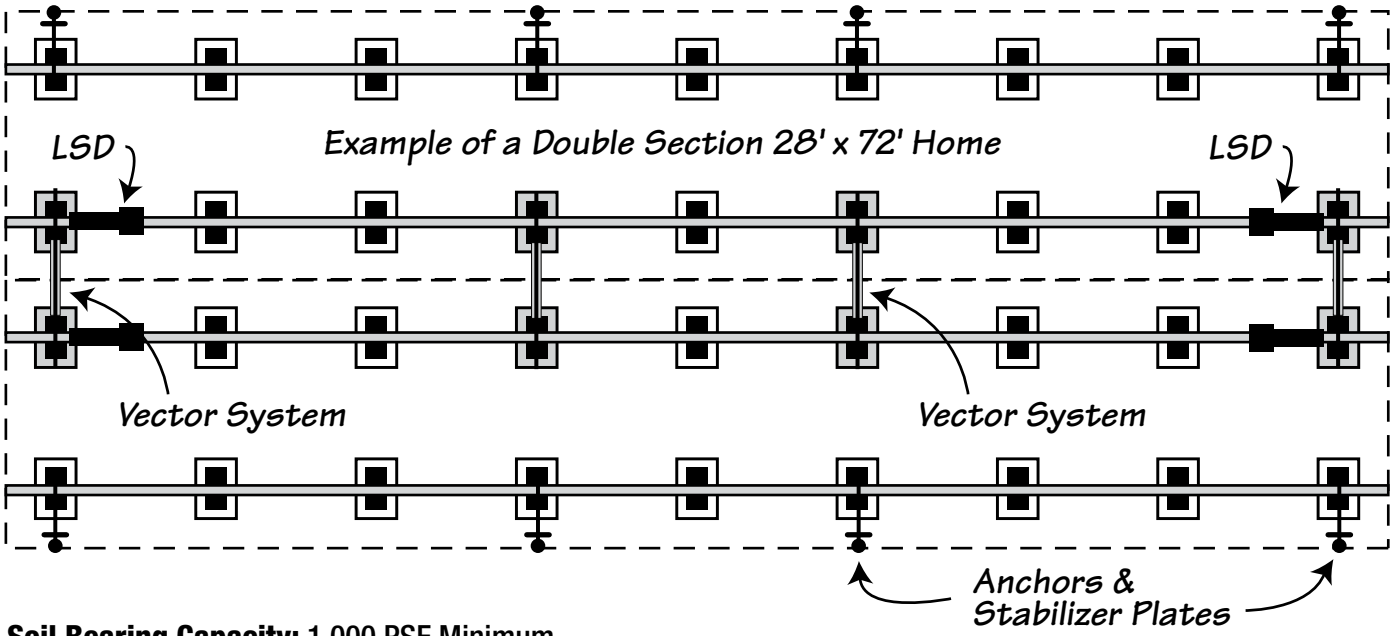

Soil Bearing Capacity: 1,000 PSF Minimum

Anchors Required: 30" with 2-4" helix anchors (#59095), 12" Stabilizer Plates (#59292) & 1-1/4" frame tie with connector

Home Length	Vector Systems Required	Anchors Required Per Side	Longitudinal System (LSD)*
0 to 48'	2	2	2 (4 Struts)
49' to 71'	3	3	2 (4 Struts)
72' to 84'	4	4	2 (4 Struts)
85' to 90'	5	5	2 (4 Struts)

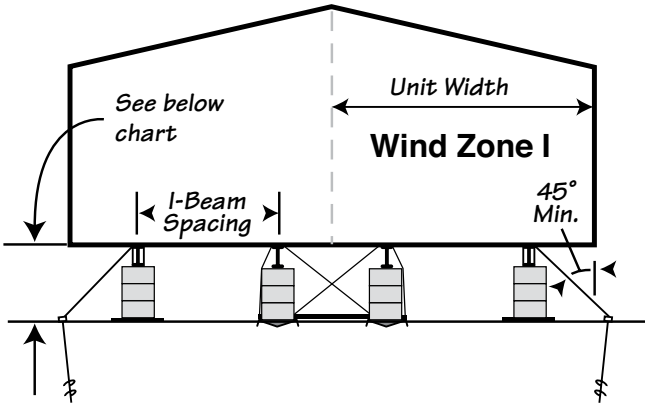

NOTES:

Pier height is measured from top of the Vector Pad to the bottom of the I-beam.

Vector Systems should be spaced as symmetrically as possible along the length of the home. Pier spacing must be consistent with home manufacturers instruction and/or state requirements.

*** One Longitudinal Vector System is made up of 2 struts, which can be used separately.**

Max. Pier Height				
Unit Width	I-Beam Spacing	Wall Height & Trib		
W	IBS	7.0' Trib=19'	7.5' Trib=18'	8.0' Trib=17'
156"	82.5"	88"	86"	85"
156"	95.5"	70"	69"	68"
156"	99.5"	65"	64"	63"
164"	82.5"	98"	96"	95"
164"	95.5"	81"	80"	78.5"
164"	99.5"	76"	74"	73"
180" Min	82.5"	119"	117"	115"
180" Min	95.5"	101"	100"	99"
180" Min	99.5"	96"	95"	94"
140" Min	82.5"	66"	64"	64"
140" Min	95.5"	48"	47"	47"
140" Min	99.5"	43"	42"	42"

Vector Dynamics Metal Pier & V-Drive Installation

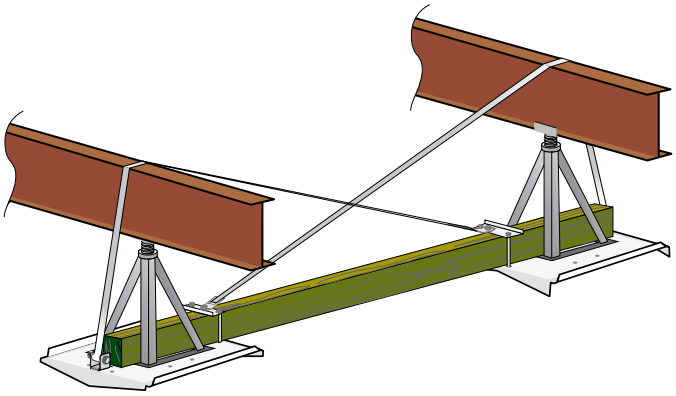

METAL PIER FOUNDATIONS

For metal piers, place the piers in the center of the Vector pads. Set the single 4x4 or two 2x4's through the piers, and bumps against the outside tension brackets. Inside tie brackets mount "upside down" as shown in drawing. Metal piers using the Vector System can only be used on level ground sets.

Conventional pier adjusters must be placed under beam with upturned edge directed towards the outside of the home.

Pier spacing must be consistent with home manufacturers' installation instructions and/or state requirements.

To cut lumber (2 - 2x4's or 1 - 4x4 per, or 1 adjustable steel compression member, part #59043 Vector system) for the center compression section, when using METAL PIER STANDS, measure center to center frame distance and add 16". Optional Moisture Termite Shield may be required in certain regions. ALL WOOD MUST BE PRESSURE TREATED, GROUND CONTACT RATED.

Tip: Pre-cut your lumber and mark as to brand or model of homes you will be installing. If frame widths are the same, the pre-cut boards will also be the same length in each Vector set-up.

V-Drive System for rocky soil conditions

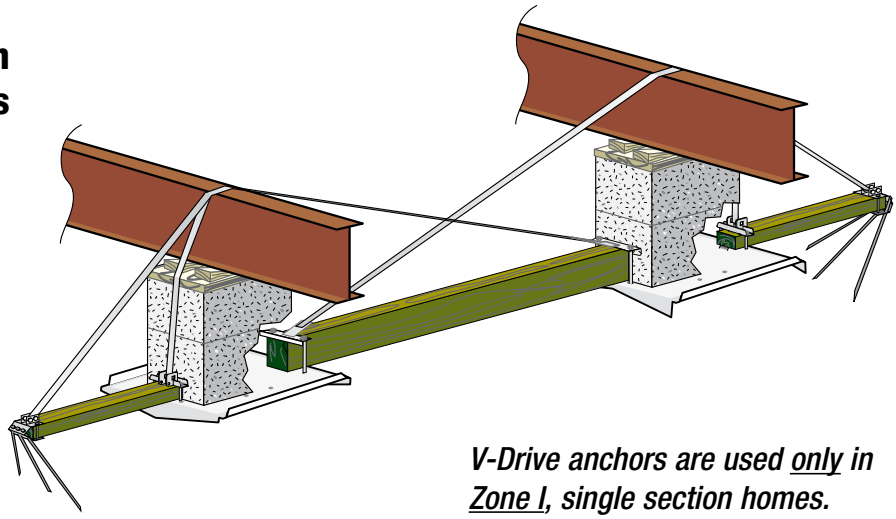

V-Drive anchors are used <u>only</u> in <u>Zone I</u>, single section homes.

V-Drive anchors are used only in Zone I, single section homes in areas where rocky soil conditions do not allow helix style anchors to be installed.

Vector Systems are set following the general set up instructions provided. With the V-Drive anchor, the short 2x4 boards used with the outside tension brackets are discarded. In place of the short 2x4's, a longer 2x4 is used as per the diagram above. This 2x4 board should extend from the base of the Vector pier set to 5 inches from the side wall of the home.

Place the V-Drive head over the end of the longer board. Using a heavy hammer or electric hammer gun, drive the three V-Drive anchor rods through the V-Drive heads at an angle of approximately 45 degrees under the home. The rods must come to a complete stop on the V-Drive head. Attach a strap with hook or buckle to the frame and attach to the V-Drive head with a slotted bolt. Cut the strap end about 12 to 15 inches past the anchor head to allow at least four or five wraps around the slotted bolt. Continue tightening strap until all slack is out and strap is tight.

VECTOR DYNAMICS INSTALLATION DESIGN INSTRUCTIONS

Vector Dynamic Foundation Systems may be used only on homes set on soils classified as Class 2, 3, 4A and 4B as described in the table below:

SOIL CLASSIFICATIONS

Soil Class	Types of Soils	Blow Count (ASTM D2586)	Soil Test Probe (1) Torque Value (2)
1	Sound hard rock.....	NA	NA
2	Very dense and/or cemented sands, coarse gravel and cobbles, preloaded silts, clays, and coral's	40-up	More than 550 lbs - in.
3	Medium-dense coarse sands, sandy gravels, very stiff silts and clays	24-39	350-549 lbs - in.
4A	Loose to medium dense sands, firm to stiff clays and silts, alluvian fill	14-23	275-349 lbs - in.
4B			175-275 lbs - in
5	Peat, organic silts, inundated silts, loose fine sand, alluvium, loess, varied clays, fill, fly ash.	0-44	175 lbs - in. and lower

(1) The purpose of the soil test probe is to gauge the strength of the soil below the surface and near the anchor's helical plate. The strength of the soil is estimated in terms of its resistance to penetration (flow) under load by means of the torque probe and is measured in lb-in. The test probe has a helix on it. The overall length of the helical Section is 10.75 in.; the major diameter is 1.25 in.; the minor diameter is 0.81 in.; the pitch is 1.75 in The shaft must be of suitable length for anchor depth.

(2) A measure synonymous with moment of a force when distributed around the shaft of the test probe.

Vector Foundation Pads Equivalent to Footer Pads*

Footer Size:
16x16 = 256 sq. in.
or 16x18 = 288 sq. in.

EQUALS
1 Vector Pad # 59310

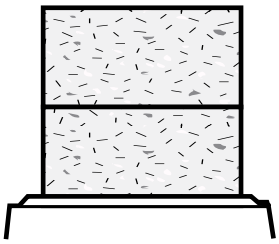

Footer Size:
20x20 = 400 sq. in.
or 17x25=425 sq. in.

EQUALS
1-Vector Pad # 59271
432 sq. in.

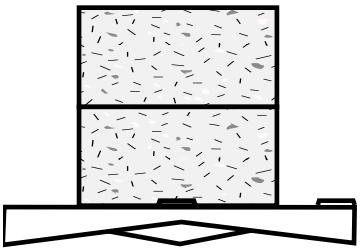

Vector Pad(s) exceed the surface area required when used as the equivalent listed above.

*Foundations in soil with a bearing capacity of less than 1,000 PSF must be designed by a Registered Professional Engineer familiar with site conditions

Vector Dynamics System for Concrete Applications

Instructions

These instructions are an addendum to the standard Vector Dynamics instructions. Read and follow all applicable instructions and guidelines in the Vector instructions and home installation manual. The Vector system for concrete pads applies to concrete footers, runners and slabs. Minimum size of concrete per Vector pier is 24” x 24” x 4” or 18” round (min) x 10” deep. The bottom of footers must be below the frost line or a minimum of 4” below finished grade whichever is greater. Concrete must be cured sufficiently to prevent spalling at anchors and allow proper installation. Also refer to ACI-308 standards.

1. Determine location of pier sets where the Vector systems will be located.
2. Place one Vector concrete pad (galv. metal) on the concrete where the pier will be located, centered under the I-beam of the home. Place the upturned edge towards the center of the home and directed to the opposite Vector pier. Do the same for the opposite Vector pier.
3. Measure the distance between the two Vector system pads at the base where the Vector pad meets the concrete. Cut two ground treated 2x4’s or Schedule 40 PVC pipe, or 1 adjustable steel compression member, part #59043 this length and place between the piers as shown.
4. Place a long u-bolt under the 2x4’s and through the holes of the Vector pad as shown.
5. Place the concrete pier blocks on the Vector pad. Center the blocks under the frame. The upturned edge end of the Vector pads should be up against the inside of the pier blocks.
6. Build vector piers but do not wedge at this time.
7. Using a concrete drill bit, drill two holes on each side into the concrete using the holes in the Vector pad as a guide. Drill the 3/8” diameter holes 3 inches deep.
8. Place an outside tension bracket on the Vector pad as shown in Illustration one. Line up the holes in the bracket, Vector pad and concrete pad.

Illustration One of a Single Section Set-Up

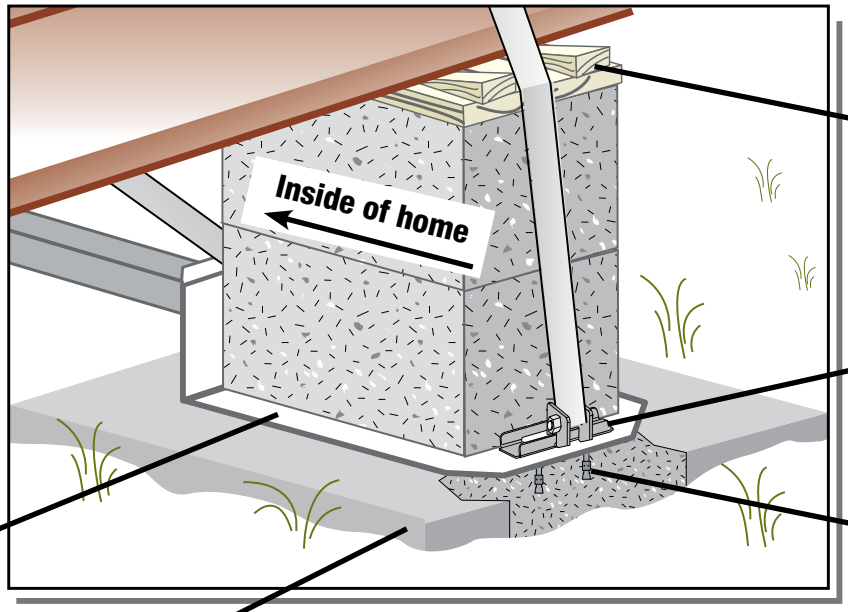

9. Put a washer and nut on one of the 3/8” x 3-3/4” wedge anchors. The nut should be screwed on enough to have 1 or 2 threads showing on the top of the bolt. Place the wedge end of the bolt into one of the holes, going through the outside tension bracket, metal Vector pad and into the concrete.
10. Using a hammer, tap the wedge bolt into the hole. Maximum height for expansion bolt above concrete is 2”.
11. Repeat for the other hole in the outside tension bracket and the two holes on the other Vector system pier set.
12. Place an inside tie bracket over the u-bolt so that the lip of the bracket is between the Vector plate and concrete blocks. Place washers and nuts on each U-bolt. Do not tighten yet (see illustration Two).
13. Attach a hook or swivel strap to the inside tie bracket, with sufficient length to go over the opposite pier and down to the outside tension bracket, plus 12 inches for wrapping the slotted bolt. (If using hook, place hook underneath the inside tie bracket, flat against compression board) Repeat for the opposite side.
14. Tighten inside u-bolts at this time.
15. Use the outside tension brackets to remove any space between the outside tension brackets, concrete blocks and the inside edge of the Vector pad, by tapping the brackets with a hammer. Wedge the pier set at this time.
16. Using a 9/16” socket wrench, tighten all of the wedge/anchor bolts, securing the outside tension bracket and Vector pad to the concrete.
17. Using a slotted bolt in the outside tension brackets, insert strap through slotted bolt with end of strap aligned with outside edge of bolt. Turn slotted bolt until straps are tight using at least five turns on the slotted bolts.

Illustration Two

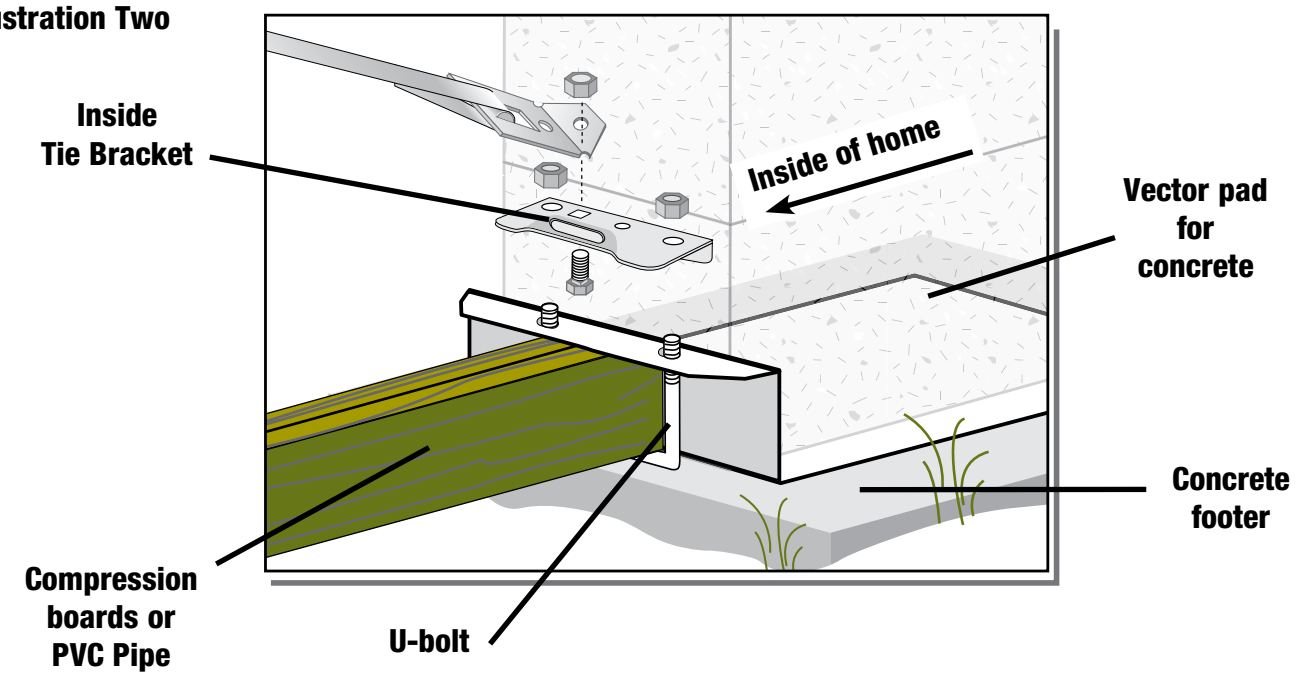

Asphalt Installation

These Asphalt instructions are an addendum to the standard Vector Dynamics concrete instructions. Read and follow all applicable guidelines in the instructions for Vector, the home, office, classroom or portable building being installed. Minimum depth of asphalt is 2 inches with a suitable base material compacted under the asphalt. This system is designed for portable classrooms, offices or other structures using I-beam frames. NOTE - For Multiple unit sets, always install by unit as they are placed.

1. The asphalt kit is used in combination with the Vector concrete kits 59036 and 59049. The expansion bolts provided in these kits are not used. Assemble the asphalt bracket as shown in figure 1, using the carriage bolts and hex nuts provided. The bolt heads will be on the underside (flat) of the Vector pad. The Asphalt bracket will be positioned between the Vector pad and the tension bracket. Repeat for the second pad.
2. Determine the location of the piers and place assembled pad on asphalt. Center pad under beam with upturned edge facing the Inside. Place second pad under opposite beam, parallel with first pad. Stack concrete blocks against up turned lip on pads and finish and wedge pier.
3. Using the asphalt brackets as a guide, drill three 5/8” holes in the asphalt at a 45 degree angle under pier. Using a sledge hammer or hammer drill, drive rods supplied through the bracket and into the asphalt, leaving one inch of rod above bracket. Repeat for opposite pad (see figure 2).
4. Measure distance between the two Vector System pads at the base where the Vector pad meets the asphalt. Cut two ground treated 2x4’s or a 4x4 to length and place between piers as shown. Place a long U-bolt under the 2x4’s and through the holes in the upturned edge of the Vector Pad. Before securing with the 3/8” nuts provided, place a 1/2”x1” carriage bolt provided in the square hole in the upturned edge of the Vector pad. The carriage bolt will be installed with the head of the bolt under the upturned edge with the threads showing.
5. Attach a strap with swivel strap connector to the 1/2” carriage bolt. Secure with 1/2” nut. Strap should be of sufficient length to go over the opposite I-beam and down to the tension bracket with 12” -15” extra to wrap around the slotted bolt. (See figure 2).
6. Insert slotted bolt in tension bracket, and cut strap so there is approx. 12”-15” of strap overlap. Insert in slot on the bolt so that it is flush with other side of bolt. Tighten strap onto bolt so there are 4-5 turns of strap around the bolt and repeat for other side.

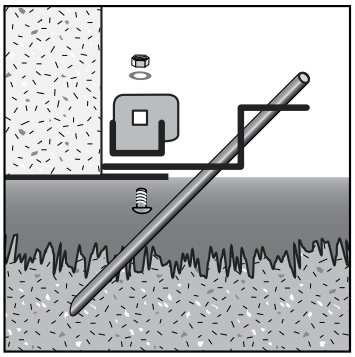

Figure 1

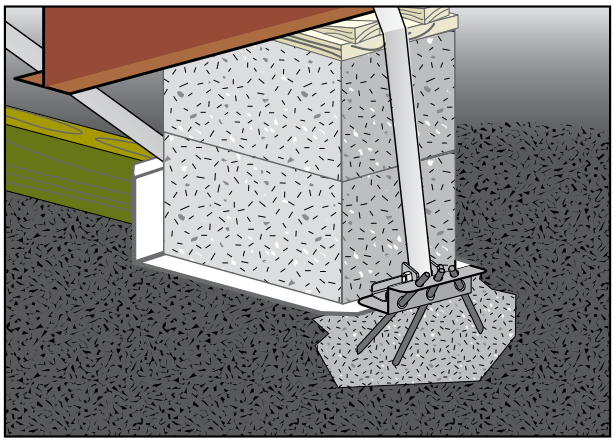

Figure 2

Vector Dynamics

TIE DOWN ENGINEERING • 255 Villanova Drive SW • Atlanta, GA 30336
www.tiedown.com (404) 344-0000 Fax (404) 349-0401

TIE DOWN ENGINEERING